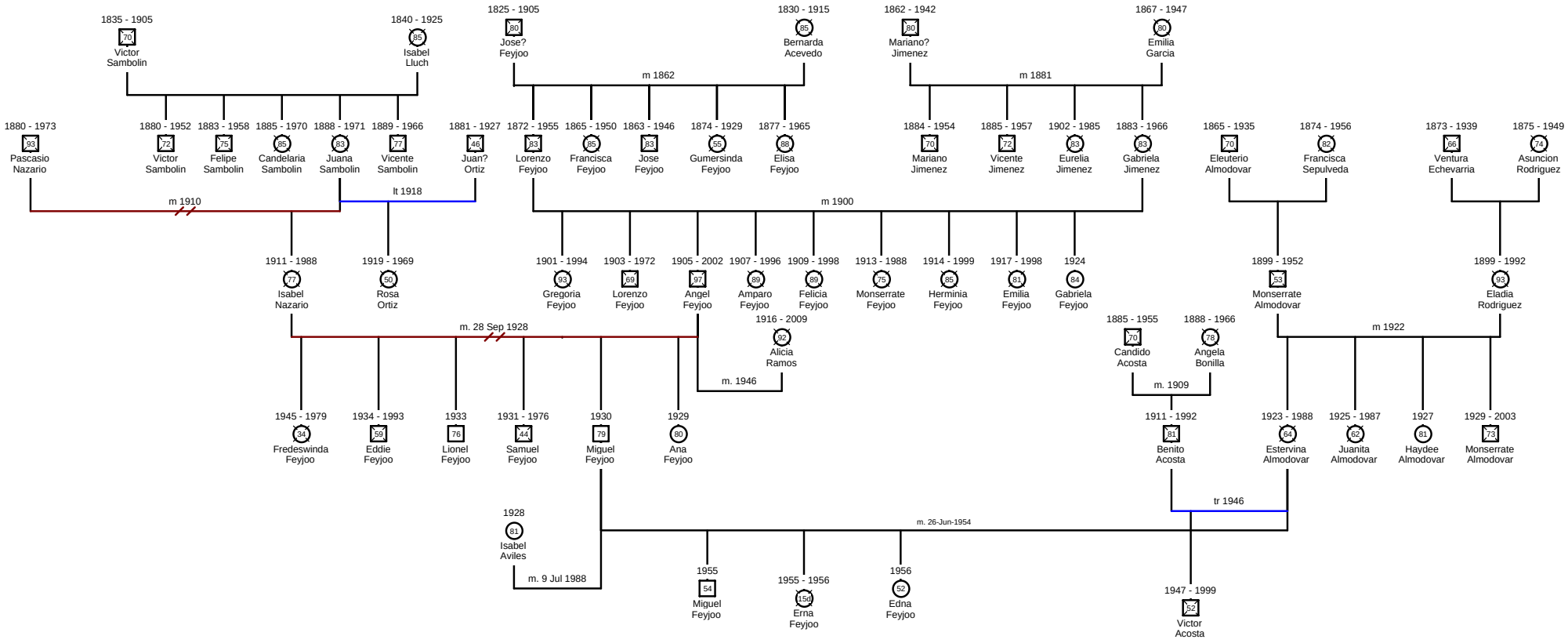
1835 - 1905
70
Victor Sambolin
1840 - 1925
85
Isabel Lluch
1825 - 1905
80
Jose? Feyjoo
1830 - 1915
85
Bernarda Acevedo
1862 - 1942
80
Mariano? Jimenez
1867 - 1947
80
Emilia Garcia
m 1862
m 1881
1880 - 1973
93
Pascasio Nazario
1880 - 1952
72
Victor Sambolin
1883 - 1958
75
Felipe Sambolin
1885 - 1970
85
Candelaria Sambolin
1888 - 1971
83
Juana Sambolin
1889 - 1966
77
Vicente Sambolin
1881 - 1927
46
Juan? Ortiz
1872 - 1955
83
Lorenzo Feyjoo
1865 - 1950
85
Francisca Feyjoo
1863 - 1946
83
Jose Feyjoo
1874 - 1929
55
Gumersinda Feyjoo
1877 - 1965
88
Elisa Feyjoo
1884 - 1954
70
Mariano Jimenez
1885 - 1957
72
Vicente Jimenez
1902 - 1985
83
Eurelia Jimenez
1883 - 1966
83
Gabriela Jimenez
1865 - 1935
70
Eleuterio Almodovar
1874 - 1956
82
Francisca Sepulveda
1873 - 1939
86
Ventura Echevarria
1875 - 1949
74
Asuncion Rodriguez
m 1910
lt 1918
m 1900
1911 - 1988
77
Isabel Nazario
1919 - 1969
50
Rosa Ortiz
1901 - 1994
93
Gregoria Feyjoo
1903 - 1972
69
Lorenzo Feyjoo
1905 - 2002
97
Angel Feyjoo
1907 - 1996
89
Amparo Feyjoo
1909 - 1998
89
Felicia Feyjoo
1913 - 1988
75
Monserrate Feyjoo
1914 - 1999
85
Herminia Feyjoo
1917 - 1998
81
Emilia Feyjoo
1924
84
Gabriela Feyjoo
1899 - 1952
53
Monserrate Almodovar
1899 - 1992
93
Eladia Rodriguez
m. 28 Sep 1928
1916 - 2009
92
Alicia Ramos
m. 1946
1885 - 1955
70
Candido Acosta
1888 - 1966
78
Angela Bonilla
m 1922
m. 1909
1945 - 1979
34
Fredeswinda Feyjoo
1934 - 1993
59
Eddie Feyjoo
1933
76
Lionel Feyjoo
1931 - 1976
44
Samuel Feyjoo
1930
79
Miguel Feyjoo
1929
80
Ana Feyjoo
1911 - 1992
81
Benito Acosta
1923 - 1988
64
Estervina Almodovar
1925 - 1987
62
Juanita Almodovar
1927
81
Haydee Almodovar
1929 - 2003
73
Monserrate Almodovar
tr 1946
1928
81
Isabel Aviles
m. 26-Jun-1954
m. 9 Jul 1988
1955
54
Miguel Feyjoo
1955 - 1956
15d
Erna Feyjoo
1956
52
Edna Feyjoo
1947 - 1999
52
Victor Acosta